CUI Devices is now Same Sky! Learn More



# SERIES: SJ1-352XNG | DESCRIPTION: AUDIO JACK

## FEATURES

- low profile design
- switch options include:
- no switch
- tip switch
- tip and ring switch

## PART NUMBER KEY

**SJ1 - 352 X NG - X**

Base Number

Switch Options:
3 = no switch
4 = tip switch
5 = tip and ring switch

Color Options:
"blank" = black
GR[1] = green
PI[1] = pink

Note: 1. Tip and ring switch model only.

## SPECIFICATIONS

| parameter | conditions/description | min | typ | max | units |
|---|---|---|---|---|---|
| rated input voltage | | | 12 | | Vdc |
| rated input current | | | | 1 | A |
| contact resistance | between terminal and mating plug<br>between terminal in a closed circuit | | | 100<br>50 | mΩ<br>mΩ |
| insulation resistance | at 500 Vdc | 100 | | | MΩ |
| voltage withstand | for 1 minute | | | 500 | Vac |
| insertion/withdrawal force | | 0.3 | | 3 | kg |
| operating temperature | | -25 | | 85 | °C |
| life | | | 5,000 | | cycles |
| flammability rating | UL94V-0 | | | | |
| RoHS | yes | | | | |

## MECHANICAL DRAWING

units: mm
tolerance:
X.X ±0.30 mm
X.XX ±0.25 mm
X.XXX ±0.20 mm
PCB: ±0.05 mm
unless otherwise specified

| DESCRIPTION | MATERIAL | PLATING/COLOR |
|---|---|---|
| terminal 1 | copper alloy t=0.20 | silver over nickel |
| terminal 2 | stainless steel t=0.20 | silver over nickel |
| terminal 3 | stainless steel t=0.20 | silver over nickel |
| terminal 4 | brass t=0.40 | silver over nickel |
| terminal 5 | brass t=0.40 | silver over nickel |
| bushing | brass | nickel |
| housing | PBT (UL94V-0) | see color options |

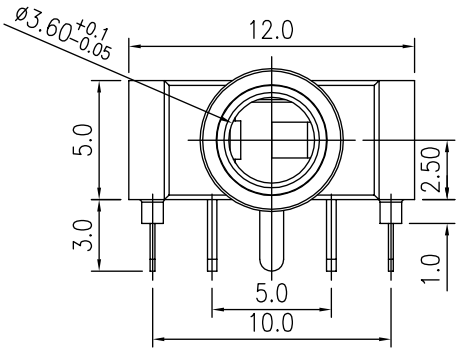


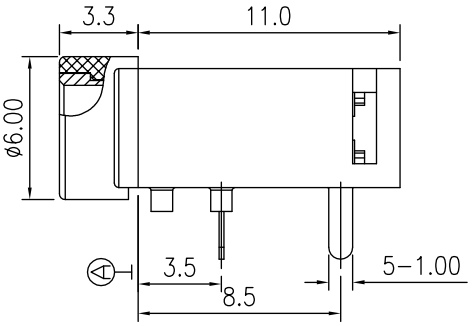


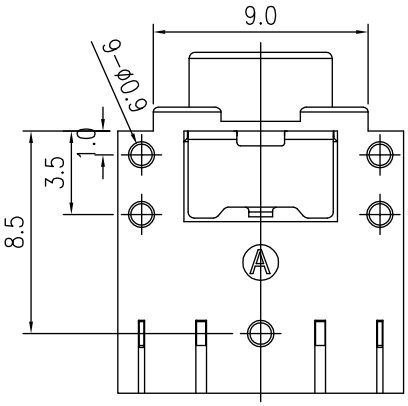


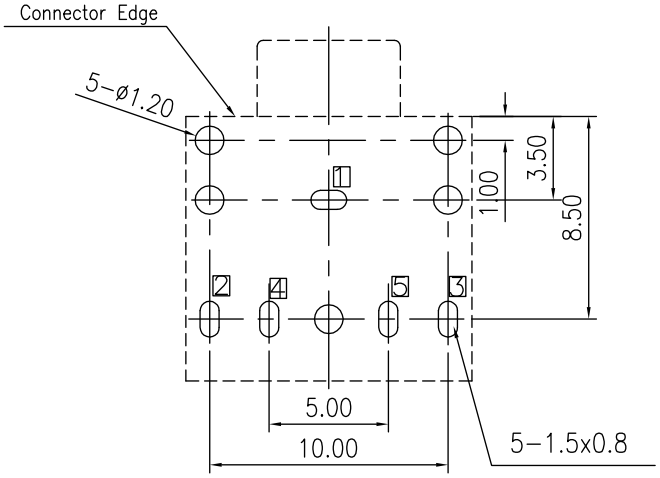


Recommended PCB Layout
Top View

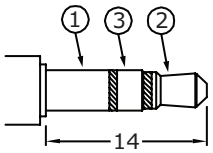


Ø3.5 MATING PLUG

| Model No. | SJ1-3523NG | SJ1-3524NG | SJ1-3525NG |
|---|---|---|---|
| Schematic | 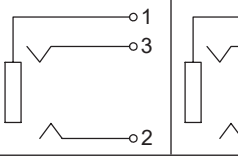 | 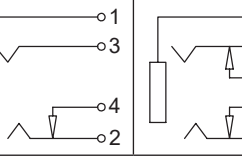 | 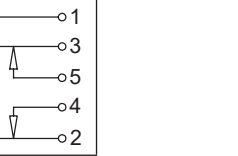 |
| PIN | | | |
| 1 | sleeve | sleeve | sleeve |
| 2 | tip | tip | tip |
| 3 | ring | ring | ring |
| 4 | NP | tip switch | tip switch |
| 5 | NP | NP | ring switch |

## SOLDERABILITY

| parameter | conditions/description | min | typ | max | units |
|---|---|---|---|---|---|
| wave soldering | for max 5 seconds | 255 | 260 | 265 | °C |

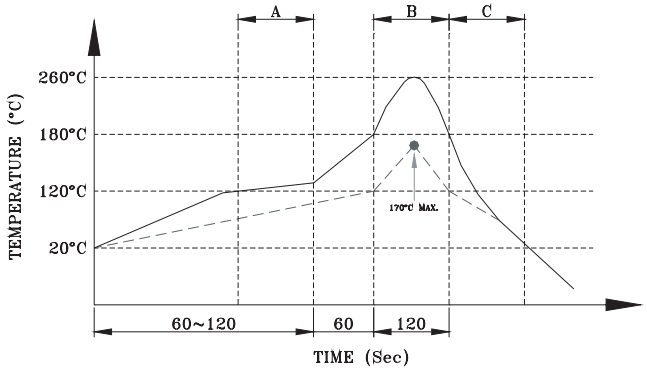


A. Preheating
B. Soldering
C. Cooling

——— Pin Temperature
– – – – Component Temperature

## REVISION HISTORY

| rev. | description | date |
|---|---|---|
| 1.0 | initial release | 10/21/2005 |
| 1.01 | new template applied | 01/25/2012 |
| 1.02 | changed terminal plating to silver | 02/13/2019 |
| 1.03 | brand update | 10/10/2019 |
| 1.04 | product reengineered for improved manufacturability and production yield, see PCN for details | 03/30/2023 |
| 1.05 | updated housing mold | 07/29/2024 |
| 1.06 | CUI Devices rebranded to Same Sky | 09/12/2024 |

The revision history provided is for informational purposes only and is believed to be accurate.

Same Sky offers a one (1) year limited warranty. Complete warranty information is listed on our website.

Same Sky reserves the right to make changes to the product at any time without notice. Information provided by Same Sky is believed to be accurate and reliable. However, no responsibility is assumed by Same Sky for its use, nor for any infringements of patents or other rights of third parties which may result from its use.

Same Sky products are not authorized or warranted for use as critical components in equipment that requires an extremely high level of reliability. A critical component is any component of a life support device or system whose failure to perform can be reasonably expected to cause the failure of the life support device or system, or to affect its safety or effectiveness.